# SE1014

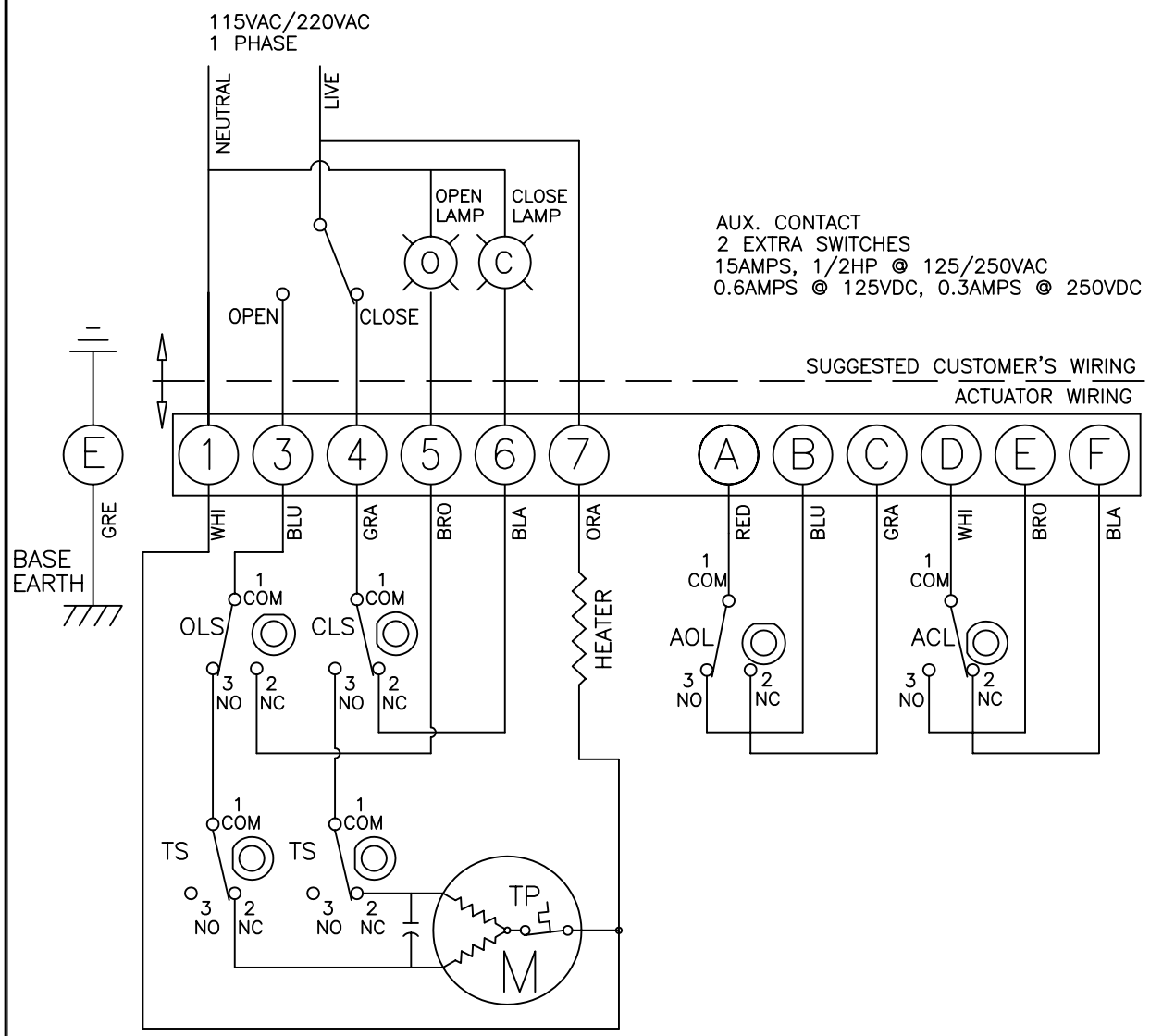


| LIMIT SWITCH OPERATION | | | |
|---|---|---|---|
| SWITCH | CLOSE ◄ | INTERMEDIATE | ► OPEN |
| ACL 1–2 | ▬ | | |
| ACL 1–3 | | ▬ | ▬ |
| AOL 1–2 | | | ▬ |
| AOL 1–3 | ▬ | ▬ | |
| CLS 1–2 | ▬ | | |
| CLS 1–3 | | ▬ | ▬ |
| OLS 1–2 | | | ▬ |
| OLS 1–3 | ▬ | ▬ | |

| SYMBOL | DESCRIPTION | RATING |
|---|---|---|
| CLS | CLOSE LIMIT SWITCH | 250VAC 5A |
| OLS | OPEN LIMIT SWITCH | 250VAC 5A |
| ACL | AUX. CLOSE LIMIT SWITCH | 250VAC 5A |
| AOL | AUX. OPEN LIMIT SWITCH | 250VAC 5A |
| TP | THERMAL PROTECTOR | 250VAC 15A |
| TS | OPTIONAL TORQUE SWITCHES | 250VAC 5A |

*EACH ACTUATOR SHOULD BE POWERED THROUGH IT'S OWN INDIVIDUAL SWITCH OR RELAY CONTACTS TO PREVENT CROSS FEED BETWEEN TWO OR MORE ACTUATORS.

| ECN | DATE | BY |
|---|---|---|
| ECN# | DATE | BY |

THE DESIGN AND DISCLOSURE CONTAINED IN THIS DRAWING WAS ORIGINATED BY, AND IS EXCLUSIVE PROPERTY OF A-T CONTROLS, INC. IT IS FURNISHED FOR VENDOR INFORMATION ONLY AND IS NOT AN AUTHORIZATION -OR- LICENSE TO MAKE THIS CONSTRUCTION OR TO FURNISH THIS INFORMATION TO OTHERS. ALL DRAWINGS MUST BE RETURNED TO A-T CONTROLS, INC. ON DEMAND. THIS DRAWING IS NOT TO BE REPRODUCED OR COPIED IN ANY FORM WITHOUT THE EXPRESS WRITTEN PERMISSION OF A-T CONTROLS, INC.

TRIAS CONTROLS

Division of A-T Controls, Inc.
11363 Deerfield Road
Cincinnati, Ohio 45242
Phone: (513) 247-5465
Fax: (513) 247-5462

| DRAWN | CHECKED BY | APPROVED |
|---|---|---|
| SAH | | |
| DATE 12/15/03 | DATE | DATE |

TITLE
ETI-700 to ETI-30,000 ELECTRIC ACTUATOR
TWO POSITION WIRING DIAGRAM
24VAC/120VAC/220VAC / 1 PHASE / 50-60HZ

TOLERANCE UNLESS OTHERWISE SPECIFIED:
TWO PLACE DECIMAL DIM. ±0.02
THREE PLACE DECIMAL DIM. ±0.010
ANGULAR DIM. ±0°–30°
DO NOT SCALE DRAWINGS